SELF-LOCKING WASHERS (Round)

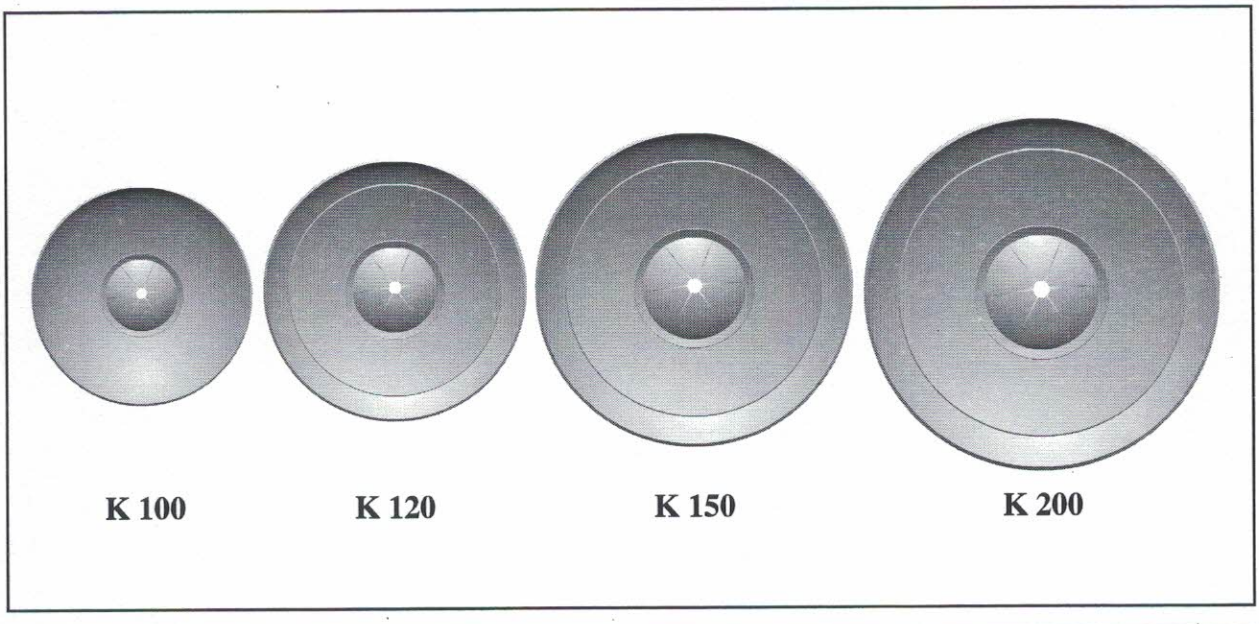

K 100 K 120 K 150 K 200

Type	K 100	K 120	K 150	K 200
Diameter	1"	1-3/16"	1-1/2"	2"
Thickness	.015 nom.	.015 nom.	.015 nom.	.015 nom
Material	Mild Steel	Mild Steel	Mild Steel	Mild Steel
Plating	Galv.	Galv.	Galv.	Galv.
Edges / flat or beveled	flat	beveled	beveled	beveled
Other materials available	Alum., S.S.	Alum., S.S.	Alum., S.S.	Alum., S.S.
Packaged per carton	1000	1000	1000	1000

MIDWEST FASTENERS Self-Locking Washers are used in conjunction with **MIDWEST FASTENERS** weld pins, insul-anchors and lacing anchors to fasten insulation in place. Simply press the self-locking washer onto the pin up to the insulation until the desired position is reached. Then clip off, (or bend over) the remaining portion of pin for a permanent attachment.

Both Round or Square self-locking washers are available as a matter of design or application preference. The domed, multi-lanced hole design provides for ease of locating washer on pin and positive locking. Washers are manufactured with a beveled edge to prevent the washer from cutting into the insulation facing.

MIDWEST FASTENERS Self-Locking Washers are available according to the chart above and with standard 10 GA, 3mm, 12 GA, or 14 GA hole sizes off-the-shelf. Other material/plating combinations and hole sizes are available by special order.

TO ORDER OR SPECIFY, GIVE:

1. Product Code ..... WA
2. Material ..... MS, SS, AL
3. Type ..... 100, 120, 150, or 200
4. Diameter of pin/stud on which washer is to be used .....

MIDWEST FASTENERS, INC.
450 Richard St.
Miamisburg, OH 45342
Toll Free: 800-852-8352
Fax: 937-866-4174
www.midwestfasteners.com

All information contained herein subject to change without notice.

SELF-STICK

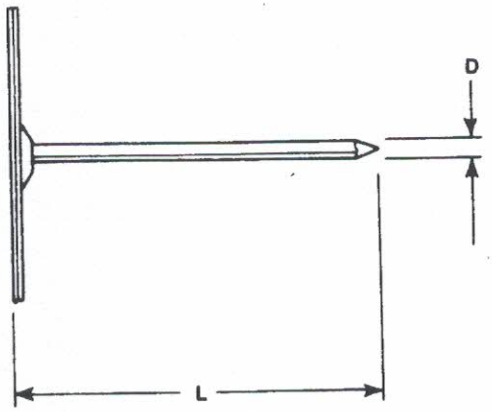

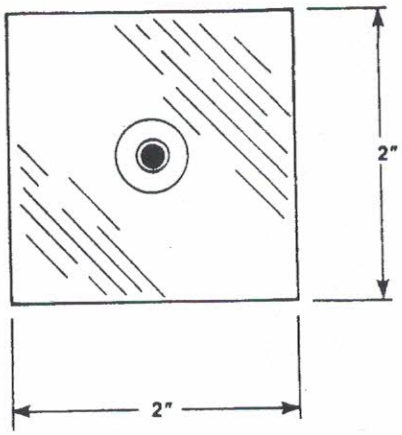

SIZE:	D	12 GA (.105") is standard. Other sizes available by special order only.
LENGTH:	L	1", 1-5/8", 2", 2-1/2", 3-1/2", 4-1/2", 5-1/2". 6-1/2", 8" and 9" are standard. Other lengths available by special order.

	PIN
MATERIAL:	LOW CARBON STEEL
PLATING:	Galvanized coating is standard.

	PLATE	***OTHER MATERIALS***
MATERIAL:	LOW CARBON STEEL	Also available by special order in all Stainless Steel or all Aluminum
PLATING:	Galvanized coating is standard.	

WASHERS: Self-locking washers are available in a variety of sizes, shapes, and materials.

TO ORDER OR SPECIFY, GIVE:

1. Product Code ..... IHSS
2. Size ..... 12 GA
3. Length L
4. Material ..... (if other than standard)

MIDWEST FASTENERS, INC.
450 Richard St.
Miamisburg, OH 45342
Toll Free: 800-852-8352
Fax: 937-866-4174
www.midwestfasteners.com

All information contained herein subject to change without notice.

LACING ANCHOR

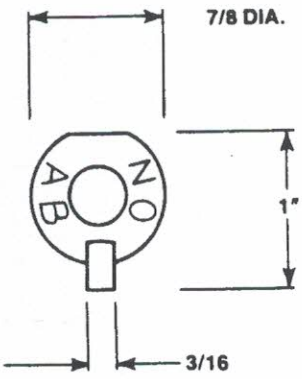

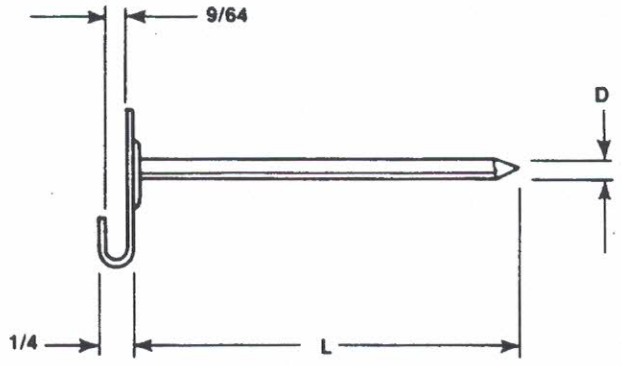

SIZE:	D	12 GA & 14 GA are standard. Other sizes are available by special order.	
LENGTH:	L	2-1/2" & 4-1/2" are standard. Other lengths available by special order.	
MATERIAL:	LOW CARBON STEEL		STAINLESS STEEL
PLATING:	Zinc plating is standard.		Does not apply to stainless.

OTHER MATERIALS:

Available by special order only.

WASHERS: Self-locking washers are available in a variety of sizes, shapes, and materials.

TO ORDER OR SPECIFY, GIVE:

1. Product Code.....LA
2. Size.....D
3. Length L
4. Material .....(if other than standard)

MIDWEST FASTENERS, INC.
450 Richard St.
Miamisburg, OH 45342
Toll Free: 800-852-8352
Fax: 937-866-4174
www.midwestfasteners.com

All information contained herein subject to change without notice.

LACING ACCESSORIES

LA HOOK

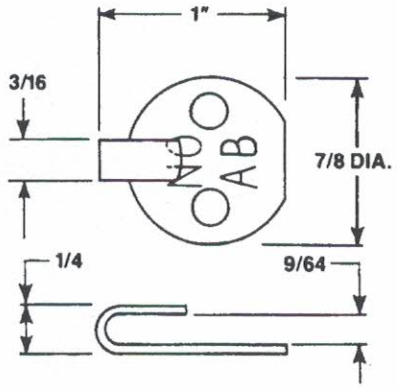

LACING HOOK

SIZE:	One size as shown.
MATERIAL:	Stainless Steel.
NO-AB:	Furnished stamped NO AB to indicate non-asbestos material.

TO ORDER OR SPECIFY, GIVE:

1. Product Code.....LAH
2. Material .....

LA L100

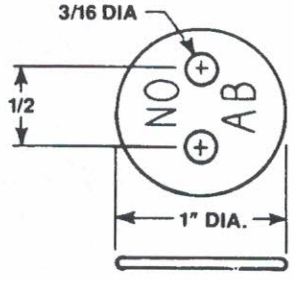

L100 LACING WASHER

SIZE:	One size as shown.
MATERIAL:	Aluminum or Stainless Steel
NO-AB:	Available stamped NO AB to indicate non-asbestos material.

TO ORDER OR SPECIFY, GIVE:

1. Product Code..... L2H
2. Material .....

LA RING

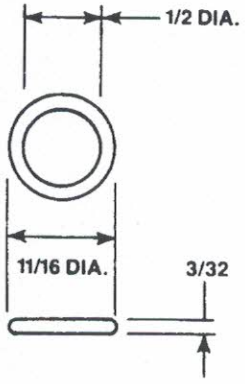

LACING RING

SIZE:	One size as shown.
MATERIAL:	Zinc alloy - bright zinc plated

TO ORDER OR SPECIFY, GIVE:

1. Product Code.....LRZA

MIDWEST FASTENERS, INC.
450 Richard St.
Miamisburg, OH 45342
Toll Free: 800-852-8352
Fax: 937-866-4174
www.midwestfasteners.com

All information contained herein subject to change without notice.