MODEL RSD – RADIAL SHUTTER DAMPER

1. STEEL CONSTRUCTION
2. RADIAL SHUTTER STYLE DAMPER
3. 5 BLADES ARE ADJUSTED THROUGH DIFFUSER FACE
4. SCREWDRIVER ADJUSTABLE
5. CLIPS TO TOP OF COLLARS
6. MILL (24) FINISH

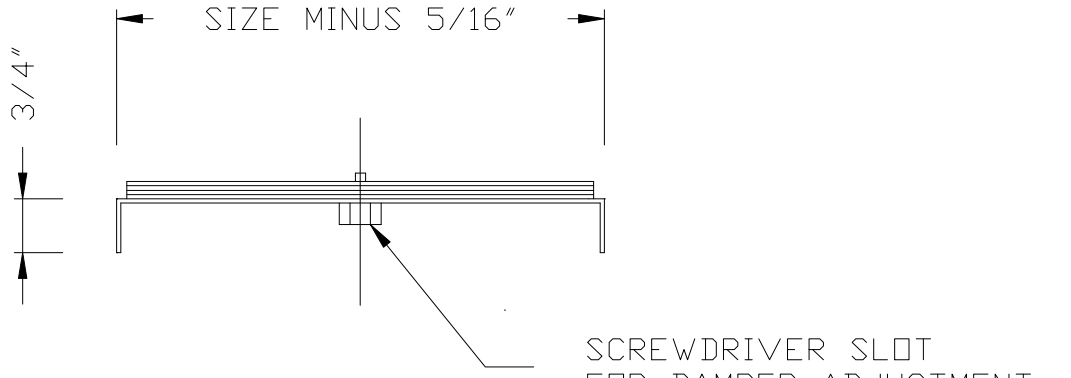

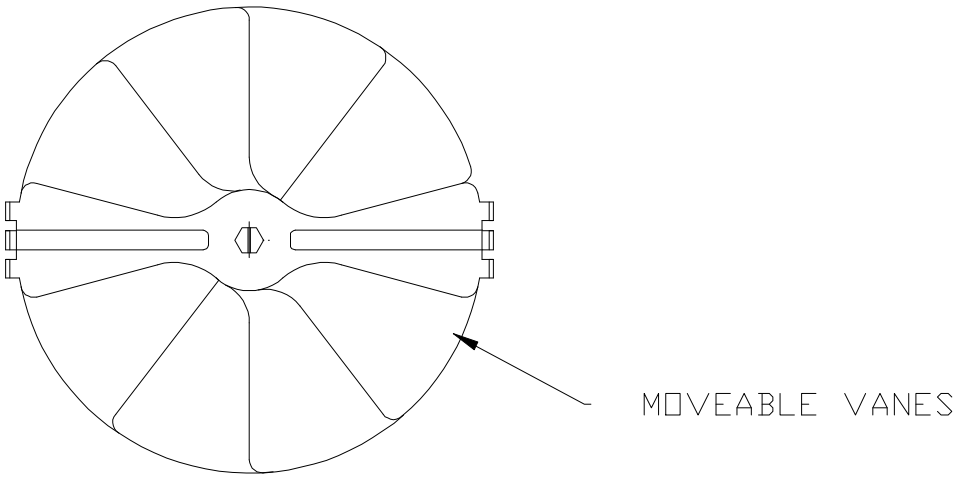

RSD			
Dia			
6"	8"	10"	12"
X	X	X	X

Submittal No. RSD	Revision:	Date: 08/01/2017	Submitted by:	Date submitted:

©2015 All rights reserved * Metal Industries, Inc. * 1985 Carroll St. * Clearwater, FL 33765 * sales@usaire.com * www.usaire.com * 1-800-998-9929