# MODEL 102M

2-WAY STAMPED SIDEWALL SUPPLY

STEEL

## MODEL 102M – 2-WAY STAMPED SIDEWALL SUPPLY

1. STEEL CONSTRUCTION
2. TWO WAY DEFLECTION
3. ½" SPACING LANCED FACE
4. MULTI-SHUTTER DAMPER TO CONTROL VOLUME OF AIR FLOW DELIVERED THROUGH THE FACE PANEL
5. RIVETED DAMPER BLADES TO END PANELS
6. STEEL HANDLE OPERATOR
7. COUNTERSUNK MOUNTING HOLES
8. INCLUDES 2" LONG ZIP SCREWS
9. WHITE FINISH (01)

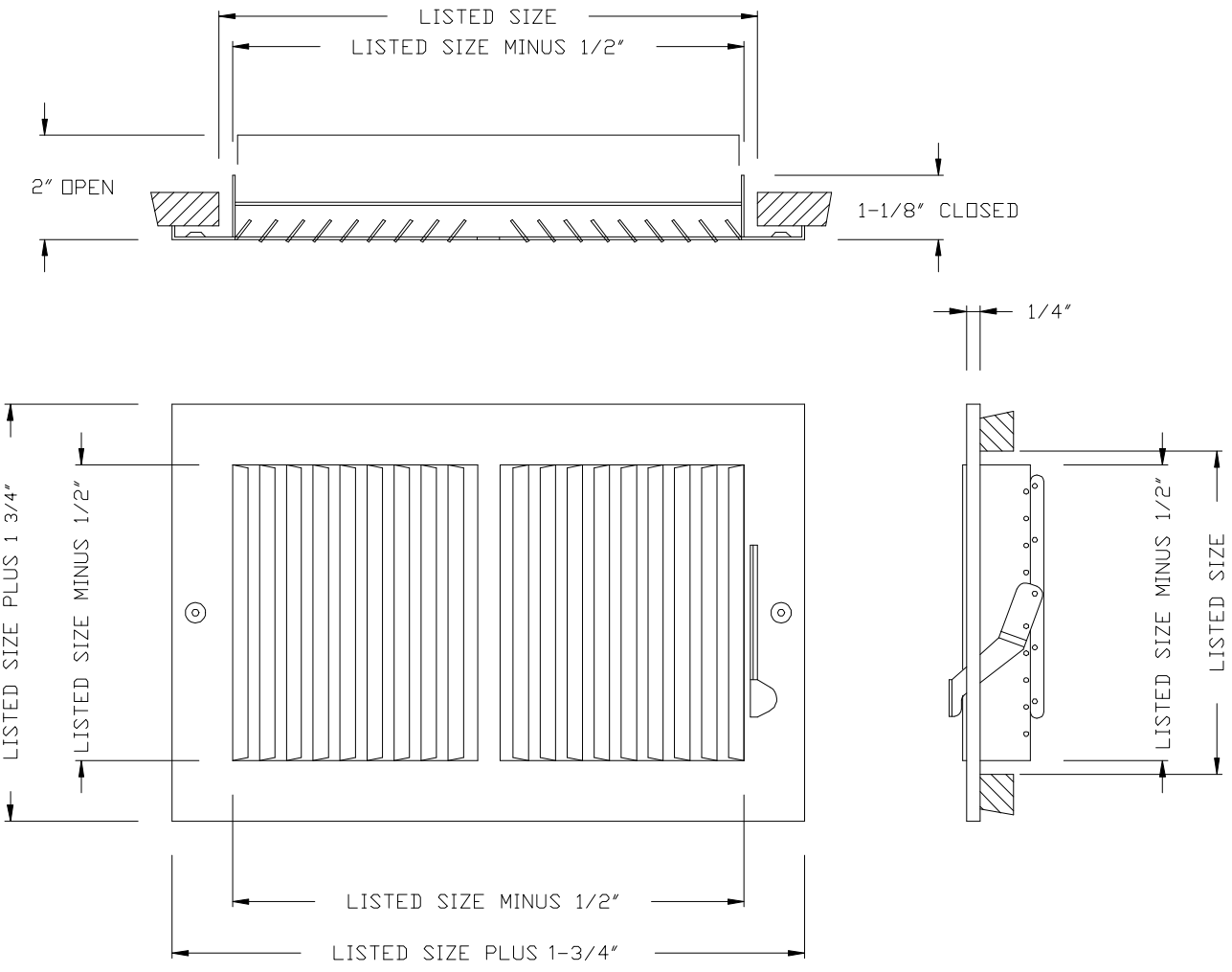


| 102M | | | | | | |
|---|---|---|---|---|---|---|
| | Width | | | | | |
| Height | 6" | 8" | 10" | 12" | 14" | 16" |
| 4" | | X | X | X | X | |
| 6" | X | X | X | X | X | X |
| 8" | | X | X | X | X | |

| Submittal No. 102M | Revision: | Date: 01/29/2018 | Submitted by: | Date submitted: |
|---|---|---|---|---|

©2015 All rights reserved * Metal Industries, Inc. * 1985 Carroll St. * Clearwater, FL 33765 * www.metalindustriesinc.com * 1-800-998-9929